# H3.50XM, H4.00XM-5, H4.00XMS-6, H4.00XM-6, H4.50XM, H5.00XM, H5.50XM

| | | | | | | | | | | | | | |
|---|---|---|---|---|---|---|---|---|---|---|---|---|---|
| CHARACTERISTICS | 1.1 | Manufacturer | | HYSTER | | | HYSTER | | | HYSTER | | | HYSTER | |
| | 1.2 | Model designation | | H3.50XM | | | H4.00XM-5 | | | H4.00XMS-6 | | | H4.00XM-6 | |
| | 1.3 | Power: battery, diesel, LPG, electric mains | | Diesel | | | Diesel | | | Diesel | | | Diesel | |
| | 1.4 | Operation: manual, pedestrian, stand, seat, man-up | | Seat | | | Seat | | | Seat | | | Seat | |
| | 1.5 | Load capacity | Q (kg) | 3 500 | | | 4 000 | | | 4 000 | | | 4 000 | |
| | 1.6 | Load centre | c (mm) | 500 | | | 500 | | | 600 | | | 600 | |
| | 1.8 | Load distance | x (mm) | 516 | | | 516 | | | 516 | | | 584 | |
| | 1.9 | Wheelbase | y (mm) | 1 830 | | | 1 830 | | | 1 830 | | | 2 100 | |
| WEIGHTS | 2.1 | Unladen weight | kg | 5 669 | | | 5 969 | | | 6 189 | | | 6 556 | |
| | 2.2 | Axle loading with load, front/rear | kg | 8 037 | 1 132 | | 8 755 | 1 213 | | 8 934 | 1 254 | | 9 438 | 1 117 |
| | 2.3 | Axle loading without load, front/rear | kg | 2 594 | 3 075 | | 2 535 | 3 434 | | 2 496 | 3 693 | | 3 184 | 3 372 |
| WHEELS & TYRES | 3.1 | Tyres: L=pneumatic, V=solid, SE=pneumatic-shaped solid | | SE | | | SE | | | SE | | | SE | |
| | 3.2 | Tyre size, front | | 250 x 15 | | | 250 x 15 | | | 250 x 15 | | | 300 x 15 | |
| | 3.3 | Tyre size, rear | | 7,00 x 12 | | | 7,00 x 12 | | | 7,00 x 12 | | | 7,00 x 12 | |
| | 3.5 | Number of wheels, front/rear (X = driven) | | 2X | 2 | | 2X | 2 | | 2X | 2 | | 2X | 2 |
| | 3.6 | Track width, front | $b_{10}$ (mm) | 1 152 | | | 1 152 | | | 1 152 | | | 1 150 | |
| | 3.7 | Track width, rear | $b_{11}$ (mm) | 1 135 | | | 1 135 | | | 1 135 | | | 1 135 | |
| DIMENSIONS | 4.1 | Mast tilt, $\alpha$ = forward/$\beta$ = back | degrees | 6 | 12 | | 6 | 12 | | 6 | 12 | | 6 | 12 |
| | 4.2 | Height of mast, lowered | $h_1$ (mm) | 2 717 | | | 2 171 | | | 2 171 | | | 2 514 | |
| | 4.3 | Free lift ¶ | $h_2$ (mm) | 100 | | | 100 | | | 100 | | | 100 | |
| | 4.4 | Lift height ¶ | $h_3$ (mm) | 3 050 | | | 3 050 | | | 3 050 | | | 3 390 | |
| | 4.5 | Height of mast, extended: With/without load backrest extension | $h_4$ (mm) | 4 335 | 3 864 | | 4 335 | 3 864 | | 4 335 | 3 864 | | 4 765 | 4 376 |
| | 4.7 | Overhead guard height | $h_6$ (mm) | 2 272 | | | 2 272 | | | 2 272 | | | 2 320 | |
| | 4.8 | Seat height | $h_7$ (mm) | 1 110 | | | 1 110 | | | 1 110 | | | 1 153 | |
| | 4.12 | Towing coupling height | $h_{10}$ (mm) | 500 | | | 500 | | | 500 | | | 500 | |
| | 4.19 | Overall length | $l_1$ (mm) | 4 122 | | | 4 140 | | | 4 159 | | | 4 436 | |
| | 4.20 | Length to face of forks | $l_2$ (mm) | 2 902 | | | 2 920 | | | 2 939 | | | 3 216 | |
| | 4.21 | Overall width | $b_1/b_2$ (mm) | 1 402 | 1 760 | | 1 402 | 1 760 | | 1 402 | 1 760 | | 1 450 | 1 875 |
| | 4.22 | Fork dimensions | s/e/l (mm) | 50 | 125 | 1 220 | 50 | 125 | 1 220 | 50 | 125 | 1 220 | 60 | 150 | 1 220 |
| | 4.23 | Fork carriage DIN 15173. Class, A/B | | 3A | | | 3A | | | 3A | | | 4A | |
| | 4.24 | Fork carriage width ● | $b_3$ (mm) | 1 201 | | | 1 201 | | | 1 201 | | | 1 201 | |
| | 4.31 | Ground clearance under mast, with load | $m_1$ (mm) | 125 | | | 125 | | | 125 | | | 171 | |
| | 4.32 | Ground clearance, centre of wheelbase | $m_2$ (mm) | 194 | | | 194 | | | 194 | | | 237 | |
| | 4.33 | Aisle width with pallets 1 000 mm x 1 200 mm wide ◆ | Ast (mm) | 4 236 | | | 4 273 | | | 4 301 | | | 4 564 | |
| | 4.34 | Aisle width with pallets 800 mm x 1 200 mm long ◆ | Ast (mm) | 4 436 | | | 4 473 | | | 4 501 | | | 4 764 | |
| | 4.35 | Outer turning radius | $W_a$ (mm) | 2 520 | | | 2 550 | | | 2 585 | | | 2 780 | |
| | 4.36 | Inner turning radius | $b_{13}$ (mm) | 44 | | | 44 | | | 44 | | | 154 | |
| PERFORMANCE | 5.1 | Travel speed with/without load | km/h | 21 | 22 | | 21 | 22 | | 21 | 22 | | 24 | 25 |
| | 5.2 | Lifting speed with/without load | m/sec | 0,54 | 0,59 | | 0,54 | 0,59 | | 0,54 | 0,59 | | 0,40 | 0,43 |
| | 5.3 | Lowering speed with/without load | m/sec | 0,54 | 0,48 | | 0,54 | 0,48 | | 0,54 | 0,48 | | 0,46 | 0,41 |
| | 5.5 | Drawbar pull with/without load, 60 minute rating | N | 30 799 | 23 403 | | 30 661 | 22 871 | | 30 626 | 22 519 | | 26 022 | 25 515 |
| | 5.6 | Maximum drawbar pull with/without load, 5 minute rating | N | 31 756 | 23 403 | | 31 618 | 22 871 | | 31 582 | 22 519 | | 27 001 | 26 452 |
| | 5.7 | Gradeability with/without load, 30 minute rating † | % | 36,5 | 28,9 | | 33,0 | 26,6 | | 32,2 | 25,2 | | 26,0 | 31,0 |
| | 5.8 | Maximum gradeability with/without load, 5 minute rating † | % | 37,7 | 28,9 | | 34,2 | 26,6 | | 33,3 | 25,2 | | 27,0 | 31,0 |
| | 5.9 | Acceleration time with/without load | sec | 4,4 | 3,8 | | 4,5 | 3,9 | | 4,6 | 3,9 | | 4,7 | 3,9 |
| | 5.10 | Service brake | | Hydraulic | | | Hydraulic | | | Hydraulic | | | Hydraulic | |
| ENGINE | 7.1 | Engine manufacturer/type | | Perkins 1004.42 | | | Perkins 1004.42 | | | Perkins 1004.42 | | | Perkins 1004.42 | |
| | 7.2 | Engine output, in accordance with ISO 1585 | kW | 58,7 | | | 58,7 | | | 58,7 | | | 58,7 | |
| | 7.3 | Governed speed | rpm | 2 200 | | | 2 200 | | | 2 200 | | | 2 200 | |
| | 7.4 | Number of cylinders/displacements | $cm^3$ | 4 | 4 200 | | 4 | 4 200 | | 4 | 4 200 | | 4 | 4 200 |
| | 7.5 | Fuel consumption | l/h | - | | | - | | | - | | | - | |
| OTHER | 8.1 | Drive control | | Hydrostatic | | | Hydrostatic | | | Hydrostatic | | | Hydrostatic | |
| | 8.2 | Working pressure for attachments | bar | 155 | | | 155 | | | 155 | | | 155 | |
| | 8.3 | Oil flow for attachments | l/min | 91 | | | 91 | | | 91 | | | 108 | |
| | 8.4 | Average noise level at driver's ear (Lpaz) ❑ | dB (A) | ☎ | | | ☎ | | | ☎ | | | ☎ | |
| | | Guaranteed sound power (Lwaz) ❍ | dB | ☎ | | | ☎ | | | ☎ | | | ☎ | |

**Equipment and weight:**

Weights (line 2.1) are based on the following specifications:

Complete truck with Perkins 1004.42 diesel engine hydrostatic transmission, 3 100 mm Vista 2-stage limited free lift mast (H3.50XM-H4.00XMS-6) or 3 450 mm Vista 2-stage limited free lift mast (H4.00XM-6-H5.50XM), 1 201 mm hook type carriage with load backrest and 1 220 mm forks, pneumatic shaped solid tyres, overhead guard and load backrest extension.

| HYSTER | HYSTER | HYSTER | 1.1 | |
|---|---|---|---|---|
| H4.50XM | H5.00XM | H5.50XM | 1.2 | CHARACTERISTICS |
| Diesel | Diesel | Diesel | 1.3 | |
| Seat | Seat | Seat | 1.4 | |
| 4 500 | 5 000 | 5 500 | 1.5 | |
| 600 | 600 | 600 | 1.6 | |
| 584 | 584 | 584 | 1.8 | |
| 2 100 | 2 100 | 2 100 | 1.9 | |

| | | | | | | | |
|---|---|---|---|---|---|---|---|
| 6 885 | | 7 184 | | 7 434 | | 2.1 | WEIGHTS |
| 10 155 | 1 229 | 10 878 | 1 306 | 11 593 | 1 340 | 2.2 | |
| 3 119 | 3 766 | 3 060 | 4 124 | 2 994 | 4 440 | 2.3 | |

| | | | | | | | |
|---|---|---|---|---|---|---|---|
| SE | | SE | | SE | | 3.1 | WHEELS & TYRES |
| 300 x 15 | | 300 x 15 | | 300 x 15 | | 3.2 | |
| 7,00 x 12 | | 7,00 x 15 | | 7,00 x 15 | | 3.3 | |
| 2X | 2 | 2X | 2 | 2X | 2 | 3.5 | |
| 1 150 | | 1 150 | | 1 150 | | 3.6 | |
| 1 135 | | 1 135 | | 1 135 | | 3.7 | |

| | | | | | | | | | |
|---|---|---|---|---|---|---|---|---|---|
| 6 | 12 | 6 | 12 | 6 | 12 | | | 4.1 | DIMENSIONS |
| 2 514 | | 2 514 | | 2 514 | | | | 4.2 | |
| 100 | | 100 | | 100 | | | | 4.3 | |
| 3 390 | | 3 390 | | 3 390 | | | | 4.4 | |
| 4 765 | 4 376 | 4 765 | 4 376 | 4 765 | 4 376 | | | 4.5 | |
| 2 320 | | 2 350 | | 2 350 | | | | 4.7 | |
| 1 153 | | 1 153 | | 1 153 | | | | 4.8 | |
| 500 | | 500 | | 500 | | | | 4.12 | |
| 4 467 | | 4 515 | | 4 550 | | | | 4.19 | |
| 3 247 | | 3 295 | | 3 330 | | | | 4.20 | |
| 1 450 | 1 875 | 1 450 | 1 875 | 1 450 | 1 875 | | | 4.21 | |
| 60 | 150 | 1 220 | 60 | 150 | 1 220 | 60 | 150 | 1 220 | 4.22 |
| 4A | | 4A | | 4A | | | | 4.23 | |
| 1 201 | | 1 201 | | 1 201 | | | | 4.24 | |
| 171 | | 171 | | 171 | | | | 4.31 | |
| 237 | | 237 | | 237 | | | | 4.32 | |
| 4 609 | | 4 669 | | 4 709 | | | | 4.33 | |
| 4 809 | | 4 869 | | 4 909 | | | | 4.34 | |
| 2 825 | | 2 885 | | 2 925 | | | | 4.35 | |
| 154 | | 154 | | 154 | | | | 4.36 | |

| | | | | | | | |
|---|---|---|---|---|---|---|---|
| 24 | 25 | 24 | 25 | 24 | 25 | 5.1 | PERFORMANCE |
| 0,40 | 0,43 | 0,40 | 0,43 | 0,40 | 0,43 | 5.2 | |
| 0,47 | 0,41 | 0,47 | 0,41 | 0,47 | 0,41 | 5.3 | |
| 25 880 | 25 459 | 25 742 | 25 407 | 25 622 | 25 372 | 5.5 | |
| 26 858 | 26 396 | 26 720 | 26 344 | 26 600 | 26 309 | 5.6 | |
| 23,8 | 28,7 | 22,1 | 26,9 | 20,6 | 25,4 | 5.7 | |
| 24,8 | 28,7 | 22,9 | 26,9 | 21,5 | 25,4 | 5.8 | |
| 4,7 | 4,0 | 4,9 | 4,1 | 5,1 | 4,2 | 5.9 | |
| Hydraulic | | Hydraulic | | Hydraulic | | 5.10 | |

| | | | | | | | |
|---|---|---|---|---|---|---|---|
| Perkins 1004.42 | | Perkins 1004.42 | | Perkins 1004.42 | | 7.1 | ENGINE |
| 58,7 | | 58,7 | | 58,7 | | 7.2 | |
| 2 200 | | 2 200 | | 2 200 | | 7.3 | |
| 4 | 4 200 | 4 | 4 200 | 4 | 4 200 | 7.4 | |
| - | | - | | - | | 7.5 | |

| | | | | |
|---|---|---|---|---|
| Hydrostatic | Hydrostatic | Hydrostatic | 8.1 | OTHER |
| 155 | 155 | 155 | 8.2 | |
| 108 | 108 | 108 | 8.3 | |
| ☎ | ☎ | ☎ | 8.4 | |
| ☎ | ☎ | ☎ | | |

**Fuel tank capacity:**

H3.50XM-H4.00XMS-6: 69 litres
H4.00XM-6-H5.50XM: 103 litres

**Forks:**

H3.50XM-H4.00XMS-6: 50 x 125 x 1 220 to 1 800 mm long
H4.00XM-6-H5.50XM: 60 x 150 x 1 220 to 1 800 mm long

**Fork spacing:**

| | | |
|---|---|---|
| Inside to inside, minimum: | 135 mm (H3.50XM-H4.00XMS-6) | 160 mm (H4.00XM-6-H5.50XM) |
| Outside to outside, maximum: | 1 105 mm (H3.50XM-H4.00XMS-6) | 1 109 mm (H4.00XM-6-H5.50XM) |

## Truck dimensions

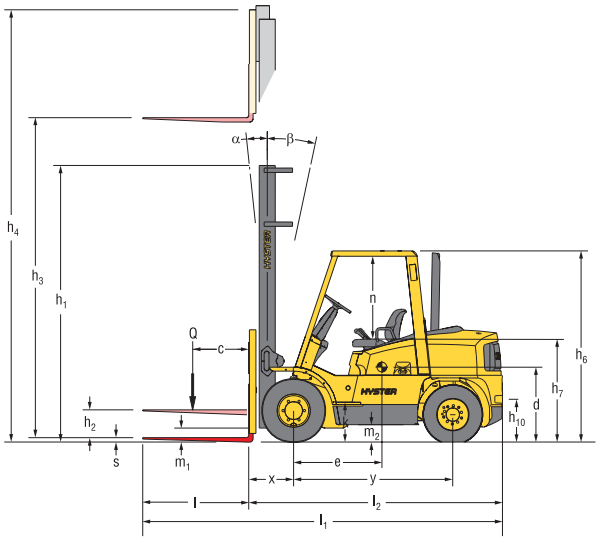


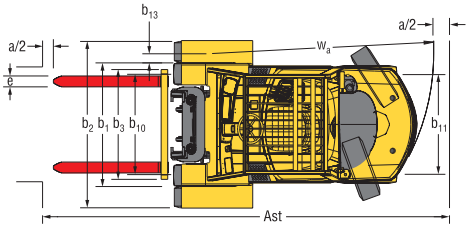


= Centre of gravity of unladen truck

Ast = $W_a$ + x + $l_6$ + a (see lines 4.33 & 4.34)

a = Minimum operating clearance

(V.D.I. standard = 200 mm  BITA recommendation = 300 mm)

$l_6$ = Load length

| Model | | H3.50XM | H4.00XM-5 | H4.00XMS-6 | H4.00XM-6 | H4.50XM | H5.00XM | H5.50XM |
|---|---|---|---|---|---|---|---|---|
| Load moment cm-kg | | 355 600 | 406 400 | 446 400 | 473 600 | 532 800 | 592 000 | 651 200 |
| Dimensions (mm) | d | 733 | 737 | 739 | 796 | 797 | 794 | 792 |
| | e | 991 | 1 050 | 1 091 | 1 079 | 1 148 | 1 203 | 1 252 |
| | k | 450 | 450 | 450 | 493 | 493 | 493 | 493 |
| | n | 1 070 | 1 070 | 1 070 | 1 070 | 1 070 | 1 070 | 1 070 |

## Rated capacities

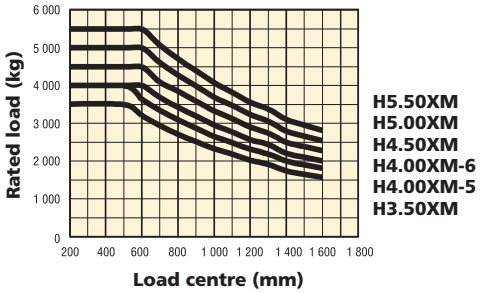


**Load centre**

Distance from front of forks to centre of gravity of load.

**Rated load**

Based on vertical masts up to 4 300 mm (H3.50XM, H4.00XM-5, H4.00XMS-6) or 4 050 mm (H4.00XM-6, H4.50XM, H5.00XM) to top of forks.

**NOTE:**
Specifications are affected by the condition of the vehicle and how it is equipped, as well as the nature and condition of the operating area. If these specifications are critical, the proposed application should be discussed with your dealer.

- ● Add 49 mm with load backrest extension
- ¶ Bottom of forks
- ◆ Stacking aisle width (lines 4.33 & 4.34) are based on the V.D.I. standard calculation as shown on illustration. The British Industrial Truck Association recommends the addition of 100 mm to the total clearance (dimension a) for extra operating margin at the rear of the truck.
- † Gradeability figures (lines 5.7 & 5.8) are provided for comparison of tractive performance, but are not intended to endorse the operation of the vehicle on the stated inclines. Follow instructions in the operating manual regarding operation on inclines.
- ❑ Noise level based on the weighting values contained in EN12053
- ❍ Noise level measured according to 2000/14/EC directive

**Mast tables:**

- ◇ 6° Back tilt required
- ◗ Lowered height lower than overhead guard height
- ★ Add 471 mm with load backrest extension
- ❖ Add 423 mm with load backrest extension
- ❑ Deduct 423 mm with load backrest extension
- ■ Add 389 mm with load backrest extension
- ✱ Add 334 mm with load backrest extension
- ▲ Deduct 334 mm with load backrest extension
- ◖ Wide tread or dual drive wheels required
- ☎ Consult your Hyster lift truck dealer.



**Safety:**
This truck conforms to the current EU requirements.

# Mast and capacity information

## Vista masts H3.50-H4.00XMS-6

| | Maximum fork height mm | Back tilt | Overall lowered height mm | Overall extended height mm | Free lift (top of forks) mm |
|---|---|---|---|---|---|
| Vista 2-Stg limited free lift | **3 100** | 12° ◇ | 2 171 ◗ | 3 864 ★ | 150 |
| | **3 700** | 12° ◇ | 2 471 | 4 464 ★ | 150 |
| | **4 300** | 12° | 2 771 | 5 064 ★ | 150 |
| | **5 000** | 6° | 3 221 | 5 764 ★ | 150 |
| | **5 600** | 6° | 3 621 | 6 364 ★ | 150 |
| | **6 200** | 6° | 4 021 | 6 964 ★ | 150 |
| Vista 2-Stg full free lift | **3 100** | 12° ◇ | 2 171 ◗ | 3 912 ❖ | 1 380 ❑ |
| | **3 700** | 12° ◇ | 2 471 | 4 512 ❖ | 1 680 ❑ |
| Vista 3-Stg full free lift | **4 415** | 6° | 2 171 ◗ | 5 227 ❖ | 1 380 ❑ |
| | **4 950** | 6° | 2 371 | 5 762 ❖ | 1 580 ❑ |
| | **5 250** | 6° | 2 471 | 6 062 ❖ | 1 680 ❑ |
| | **5 550** | 6° | 2 571 | 6 362 ❖ | 1 780 ❑ |
| | **6 000** | 6° | 2 771 | 6 812 ❖ | 1 980 ❑ |

## Vista masts H4.00XM-6-H5.50XM

| | Maximum fork height mm | Back tilt | Overall lowered height mm | Overall extended height mm | Free lift (top of forks) mm |
|---|---|---|---|---|---|
| Vista 2-Stg limited free lift | **2 850** | 12° ◇ | 2 214 ◗ | 3 776 ■ | 160 |
| | **3 450** | 12° ◇ | 2 514 | 4 376 ■ | 160 |
| | **4 050** | 12° | 2 814 | 4 976 ■ | 160 |
| | **4 750** | 6° | 3 264 | 5 676 ■ | 160 |
| | **5 350** | 6° | 3 664 | 6 276 ■ | 160 |
| | **5 950** | 6° | 4 064 | 6 876 ■ | 160 |
| Vista 2-Stg full free lift | **2 850** | 12° ◇ | 2 214 ◗ | 3 831 ✱ | 1 263 ▲ |
| | **3 450** | 12° ◇ | 2 514 | 4 431 ✱ | 1 563 ▲ |
| Vista 3-Stg full free lift | **4 147** | 6° | 2 214 ◗ | 5 128 ✱ | 1 263 ▲ |
| | **5 000** | 6° | 2 514 | 5 981 ✱ | 1 563 ▲ |
| | **5 300** | 6° | 2 614 | 6 281 ✱ | 1 663 ▲ |
| | **5 750** | 6° | 2 814 | 6 731 ✱ | 1 863 ▲ |

## H3.50XM-H4.00XMS-6 - Capacity chart in kg @ 500 mm (a) or @ 600 mm (b) load centre

| | Pneumatic shaped solid tyres | | | | | | | |
|---|---|---|---|---|---|---|---|---|
| | Maximum fork height (top of forks) mm | Back tilt | Without sideshift | | | With integral sideshift | | |
| | | | H3.50XM (a) | H4.00XM-5 (a) | H4.00XMS-6 (b) | H3.50XM (a) | H4.00XM-5 (a) | H4.00XMS-6 (b) |
| Vista 2-Stg limited free lift | **3 100** | 12° ◇ | 3 500 | 4 000 | 4 000 | 3 500 | 4 000 | 4 000 |
| | **3 700** | 12° ◇ | 3 500 | 4 000 | 4 000 | 3 500 | 4 000 | 4 000 |
| | **4 300** | 12° | 3 500 | 4 000 | 4 000 | 3 500 | 4 000 | 4 000 |
| | **5 000** | 6° | 3 380 | 3 870 | 3 880 | 3 360 | 3 850 | 3 850 |
| | **5 600** | 6° | 3 240 | 3 720 | 3 730 | 3 190 | 3 670 | 3 680 |
| | **6 200** | 6° | 3 080 | 3 550 | 3 570 | 3 010 | 3 480 | 3 500 |
| Vista 2-Stg full free lift | **3 100** | 12° ◇ | 3 500 | 4 000 | 4 000 | 3 400 | 3 890 | 3 890 |
| | **3 700** | 12° ◇ | 3 500 | 4 000 | 4 000 | 3 380 | 3 870 | 3 880 |
| Vista 3-Stg full free lift | **4 415** | 6° | 3 500 | 4 000 | 4 000 | 3 380 | 3 870 | 3 870 |
| | **4 950** | 6° | 3 390 | 3 880 | 3 890 | 3 250 | 3 740 | 3 750 |
| | **5 250** | 6° | 3 310 | 3 810 | 3 810 | 3 180 | 3 660 | 3 670 |
| | **5 550** | 6° | 3 230 | 3 720 | 3 730 | 3 100 | 3 580 | 3 600 |
| | **6 000** | 6° | 3 100 | 3 580 | 3 590 | 2 980 | 3 440 | 3 470 |

## H4.00XM-6-H5.50XM - Capacity chart in kg @ 600 mm load centre

| | Pneumatic shaped solid tyres | | | | | | | | | |
|---|---|---|---|---|---|---|---|---|---|---|
| | Maximum fork height (top of forks) mm | Back tilt | Without sideshift | | | | With integral sideshift | | | |
| | | | H4.00XM-6 | H4.50XM | H5.00XM | H5.50XM | H4.00XM-6 | H4.50XM | H5.00XM | H5.50XM |
| Vista 2-Stg limited free lift | **2 850** | 12° ◇ | 4 000 | 4 500 | 5 000 | 5 500 | 4 000 | 4 500 | 5 000 | 5 500 |
| | **3 450** | 12° ◇ | 4 000 | 4 500 | 5 000 | 5 500 | 3 990 | 4 490 | 4 980 | 5 480 |
| | **4 050** | 12° | 4 000 | 4 500 | 5 000 | 5 500 | 3 970 | 4 470 | 4 970 | 5 470 |
| | **4 750** | 6° | 3 890 | 4 380 | 4 880 | 5 370 | 3 840 | 4 330 | 4 820 | 5 310 |
| | **5 350** | 6° | 3 760 | 4 240 | 4 730 | 5 210 | 3 680 | 4 160 | 4 640 | 5 130 |
| | **5 950** | 6° | 3 600 | 4 080 | 4 560 | 5 030 ◖ | 3 510 | 3 990 | 4 450 | 4 910 ◖ |
| Vista 2-Stg full free lift | **2 850** | 12° ◇ | 4 000 | 4 500 | 5 000 | 5 500 | 3 970 | 4 470 | 4 960 | 5 460 |
| | **3 450** | 12° ◇ | 4 000 | 4 500 | 5 000 | 5 500 | 3 960 | 4 460 | 4 950 | 5 450 |
| Vista 3-Stg full free lift | **4 147** | 6° | 4 000 | 4 500 | 5 000 | 5 500 | 3 920 | 4 420 | 4 910 | 5 410 |
| | **5 000** | 6° | 3 840 | 4 330 | 4 820 | 5 310 | 3 740 | 4 230 | 4 710 | 5 200 |
| | **5 300** | 6° | 3 770 | 4 250 | 4 740 | 5 230 ◖ | 3 660 | 4 150 | 4 620 | 5 110 |
| | **5 750** | 6° | 3 660 | 4 140 ◖ | 4 620 ◖ | 5 100 ◖ | 3 540 | 3 990 | 4 490 ◖ | 4 960 ◖ |

FPO FPO

## Highlifts

The rated capacities shown are for trucks equipped with standard or sideshift carriage, and nominal length forks (see below). Masts above the maximum fork height shown here are classified as high lift, and depending on the tyre/tread configuration may require reduced capacity, restricted back tilt or wide tread.

| Model | Max. fork height mm | Nominal fork length mm |
|---|---|---|
| H3.50XM | 4 300 | 1 200 |
| H4.00XM-5 | 4 300 | 1 200 |
| H4.00XMS-6 | 4 300 | 1 200 |
| H4.00XM-6 | 4 050 | 1 200 |
| H4.50XM | 4 050 | 1 200 |
| H5.00XM | 4 050 | 1 200 |
| H5.50XM | 4 050 | 1 200 |

High lift masts require approval from Hyster based on specific application information. This information should be supplied on Hyster form 857025-25, and will be used to determine rated capacities to be included on a specific nameplate. The completed nameplate must be installed on the truck before it is put to use.

## Warning

Care must be exercised when handling elevated loads. When the carriage and/or load is elevated, truck stability is reduced. It is important that mast tilt in either direction be kept to a minimum when loads are elevated. Operators must be trained and adhere to the instructions contained in the Operating Manual.

Hyster Europe, Flagship House, Reading Road North, Fleet, Hants GU51 4WD, England
Hyster Europe, Nijverheidsweg 29, 6541 CL Nijmegen, The Netherlands
Hyster Europe, Portland Road, Irvine, Ayrshire KA12 8JG, Scotland
Hyster Europe, Via Confalonieri 2, 20060 Masate (MI), Italy
http://www.hyster.co.uk

01/03/202 Printed in England Form No. 871408 Rev. 2

A division of NACCO Materials Handling Limited.

FPO

# H3.50-5.50XM
# Hydrostatic models

## Diesel powered forklifts. 3 500 to 4 000 kg @ 500 mm & 4 000 to 5 500 kg @ 600 mm

### Built to last

The latest generation of 3,5 to 5,5 tonne Hyster lift are built to perform in heavy duty applications, offering durability and power combined with the best in operator comfort. Trucks that will meet your needs for high productivity, economy and ease of service.

### Complete comfort and smooth operation

The adjustable steering column and full suspension seat allows operators to select the most comfortable driving positions. Flip-up, adjustable armrest provides easy on/off access and reduces fatigue during hydraulic lever operation. Power steering and the optional Monotrol pedal promote operator productivity while the hydrostatic transmission reduces driver effort by virtually eliminating the need for braking.

For all weather protection you can choose a fully integrated cab designed for enhanced comfort.

317 mm x 60 mm and 317 mm x 63 mm automotive type brakes are vacuum-assisted, self adjusting and self-energising.

### Performance with low maintenance

Hydrostatic models feature the Perkins 1004.42 diesel engine. A maximum Peak torque of 290 Nm is produced at just 1 400 rpm and delivered through the Hyster-engineered hydrostatic drive, giving impressive gradeability, acceleration and travel speed performance.

An advanced control system allows the hydrostatic motors to make use of 100% of available engine power.

A throttle-up system optimises the performance of hydraulic functions.

With a displacement of 4,23 litre, the Perkins 1004.42 engine is designed for low emissions, low fuel consumption and easy maintenance.

The integrated cooling system for engine, hydrostatic transmission and hydraulic system has an easy-to-clean, open fin radiator. The hydrostatic oil reservoir has temperature and level sensors connected to the dash display.

The 30,4 litre fluid capacity hydraulic system has a double gear main pump and full-time, full-flow, 10-micron return line filter.

### Extra versatility

The Hyster range of Vista 2-stage limited and full-free lift and 3-stage full free lift masts are designed for good visibility and smooth, durable operation. 2-stage masts have flush-faced channels to reduce chance of load damage during operation. Hyster masts have hydraulic cushioning for optimal load control and reduced noise. For reliability and protection all hoses are routed inside the mast construction.